इंटरनेट मानक

Disclosure to Promote the Right To Information

Whereas the Parliament of India has set out to provide a practical regime of right to information for citizens to secure access to information under the control of public authorities, in order to promote transparency and accountability in the working of every public authority, and whereas the attached publication of the Bureau of Indian Standards is of particular interest to the public, particularly disadvantaged communities and those engaged in the pursuit of education and knowledge, the attached public safety standard is made available to promote the timely dissemination of this information in an accurate manner to the public.

"जानने का अधिकार, जीने का अधिकार"
Mazdoor Kisan Shakti Sangathan
"The Right to Information, The Right to Live"

"पुराने को छोड नये के तरफ"
Jawaharlal Nehru
"Step Out From the Old to the New"

IS 6800 (1972): Dimensions for Aircraft Tow Bar Connections to Tractors [TED 14: Aircraft and Space Vehicles]

"ज्ञान से एक नये भारत का निर्माण"
Satyanarayan Gangaram Pitroda
"Invent a New India Using Knowledge"

Act Number 22 of 2005
The Indian Parliament
RIGHT TO INFORMATION

Made Available By
Public.Resource.Org

"ज्ञान एक ऐसा खजाना है जो कभी चुराया नहीं जा सकता है"
Bhartṛhari—Nītiśatakam
"Knowledge is such a treasure which cannot be stolen"

BLANK PAGE

BRUTUM FULMEN

IGNORANTIA JURIS NON EXCUSAT

PROTECTED BY COPYRIGHT

Indian Standard (Reaffirmed 2005)

DIMENSIONS FOR AIRCRAFT TOW BAR CONNECTIONS TO TRACTORS

1. Scope — Dimensions for end fittings of aircraft tow bars for connection to tractors.

2. Dimensions of Tow Bar Connections

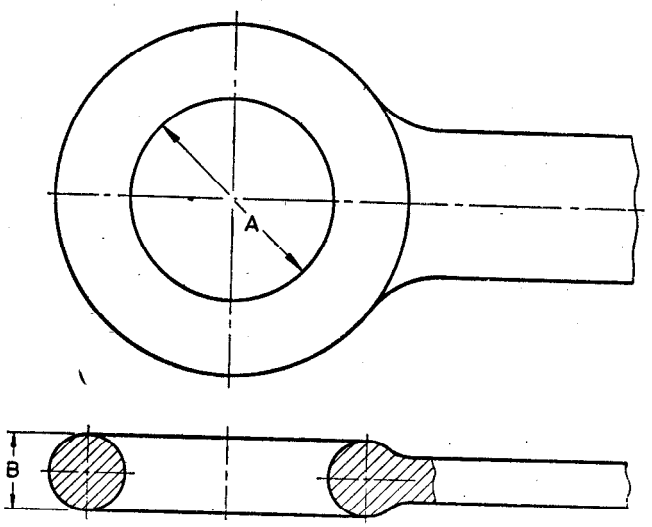

All dimensions in millimetres.

Size	A	B
1	68	25
2	76·2	40

3. Tractor Attachments — The tractor attachments shall accept fittings of the dimensions stated in **2** and their height shall be variable to enable the tow bar to be parallel to the ground.

This standard conforms to ISO/R 405-1964.

Adopted 30 November 1972 | © March 1973, ISI | Price Rs 3·00

INDIAN STANDARDS INSTITUTION
MANAK BHAVAN, 9 BAHADUR SHAH ZAFAR MARG
NEW DELHI 1

Aircraft and Space Vehicles Sectional Committee, EDC 74 [Ref: Doc: EDC 74 (1978)]

Printed at Printograph, New Delhi 5 (India)